CAPACITY NOTE

KUBICA HYBRID K6360 38

PREMISE

Before choosing the hinges for your door leaf you need to consider all the aspects of the installation and make sure that the performance of the product is adequate.

In particular, it is necessary to know the width of the door leaf and the center distance to be install the hinges.

The hinge center distance is the distance between the center of the highest hinge and the center of the lowest hinge on the door leaf (regardless other installed hinges) and it influences the hinge capacity so that the lower its value is, the lower the hinge capacity is. At the same time the hinge capacity is inversely proportional to the **width** of the door, it follows that the wider the door is, the lower the capacity of the hinges is.

By increasing the center distance, it is possible to reduce the stress on the hinges, improving their performance.

CAPACITY TABLE

The following table allows you to view the correlation between the center distance, width and weight (max possible) in a door leaf equipped with 2 **KUBICA HYBRID K6360/38** hinges

K6360 38 - 60 Kg - **N° 2 hinges**												
2000		60	60	60	60	60	60	60	60	60	58	56
1950		60	60	60	60	60	60	60	60	59	56	54
1900		60	60	60	60	60	60	60	60	57	55	53
1850		60	60	60	60	60	60	60	58	56	53	51
1800		60	60	60	60	60	60	59	56	54	52	50
1750		60	60	60	60	60	60	57	55	53	51	49
1700		60	60	60	60	60	58	56	53	51	49	47
1650		60	60	60	60	60	57	54	52	50	48	46
1600		60	60	60	60	58	55	52	50	48	46	44
1550		60	60	60	59	56	53	51	49	47	45	43
1500		60	60	60	57	54	52	49	47	45	43	42
1450		60	60	58	55	52	50	48	45	44	42	40
1540	***60***											
	926	700	800	900	950	1000	1050	1100	1150	1200	1250	1300

Hinge spacing (mm)

Door width (mm)

- Test door: center distance 1540 mm - width 926 mm - opening angle 0°-90°.
- NB: the door weight must also include the hardware and any applied decorations.

The weight is meant to be a smooth door leaf, without windows or glass inserts that remove the gravity center of the door weight from the geometric center of the door

Krona Koblenz SpA - Factory address: Via Piane, 90 - Office address: Via O. Romero, 1 47853 Coriano (RN) Italy
Tel. +39 0541 657040 - Fax +39 0541 658211 - E-mail: info@k-group.com

INSTALLATION OPTIONS

Suggestions for non-standard installations are provided below, but we inform you that the application of the concealed hinges with other devices (door closers, bumpers, panic bars, sash seals, etc.) is not considered in the capacity tables and must be tested by the customer.

ADDITION OF A THIRD CENTRAL HINGE

In the following cases, it is recommended to add a third hinge, to be installed in the center to help preserve the flatness of the door leaf:
- doors higher than 2100 mm;
- doors to be installed in a damp environment;
- thin or light material doors;
- dividing doors of spaces with very different temperatures.

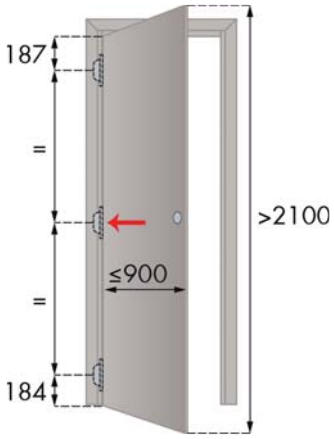

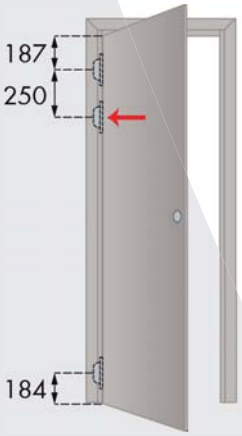

ADDITION OF A THIRD TOP HINGE

If there is a door closer, 3 hinges are required. The third hinge acts as a support for the lower one, to be installed 250 mm away from the uppermost hinge.
NB: the recommended adjustment of the door closer is the minimum requirement to make it work. Too much pressure from the door closer could compromise the work of the hinges. Furthermore, if the installed door closer has the “opening limit*” function, it must be deactivated to ensure the major durability of the hinge.

ADDITION OF A THIRD LOWER HINGE

When a doorstop or sash seals are applied, 3 hinges are required. The third hinge acts as a support for the lower one, to be installed 250 mm away from the lower positioned hinge.
NB: the doorstop must be mounted as far away as possible from the rotation axis of the door. We recommend an installation at a distance of approximately 75% of the door width in the direction of the lock.
NB: the recommended adjustment of the guillotine seal is a minimum requirement to make it work. Excessive pressure of the guillotine seal on the floor could compromise the work of the hinges.

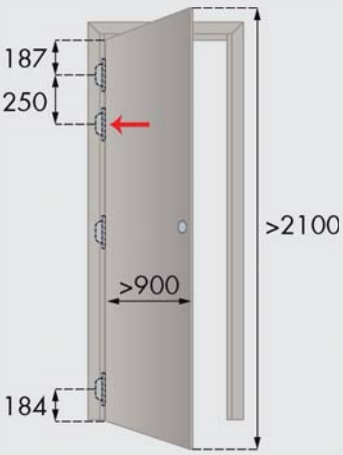

ADDITION OF A FOURTH TOP HINGE

For doors with a height greater than 2100 mm and a width greater than 900 mm, or for installations in highly crowded public places (for example schools, hospitals or airports), the installation of 4 hinges is recommended. The fourth hinge acts as a support for the upper one, to be installed 250 mm away from the uppermost hinge.

Krona Koblenz SpA - Factory address: Via Piane, 90 - Office address: Via O. Romero, 1 47853 Coriano (RN) Italy
Tel. +39 0541 657040 - Fax +39 0541 658211 - E-mail: info@k-group.com